TORONTO MORGAN OWNERS GROUP

V. 14

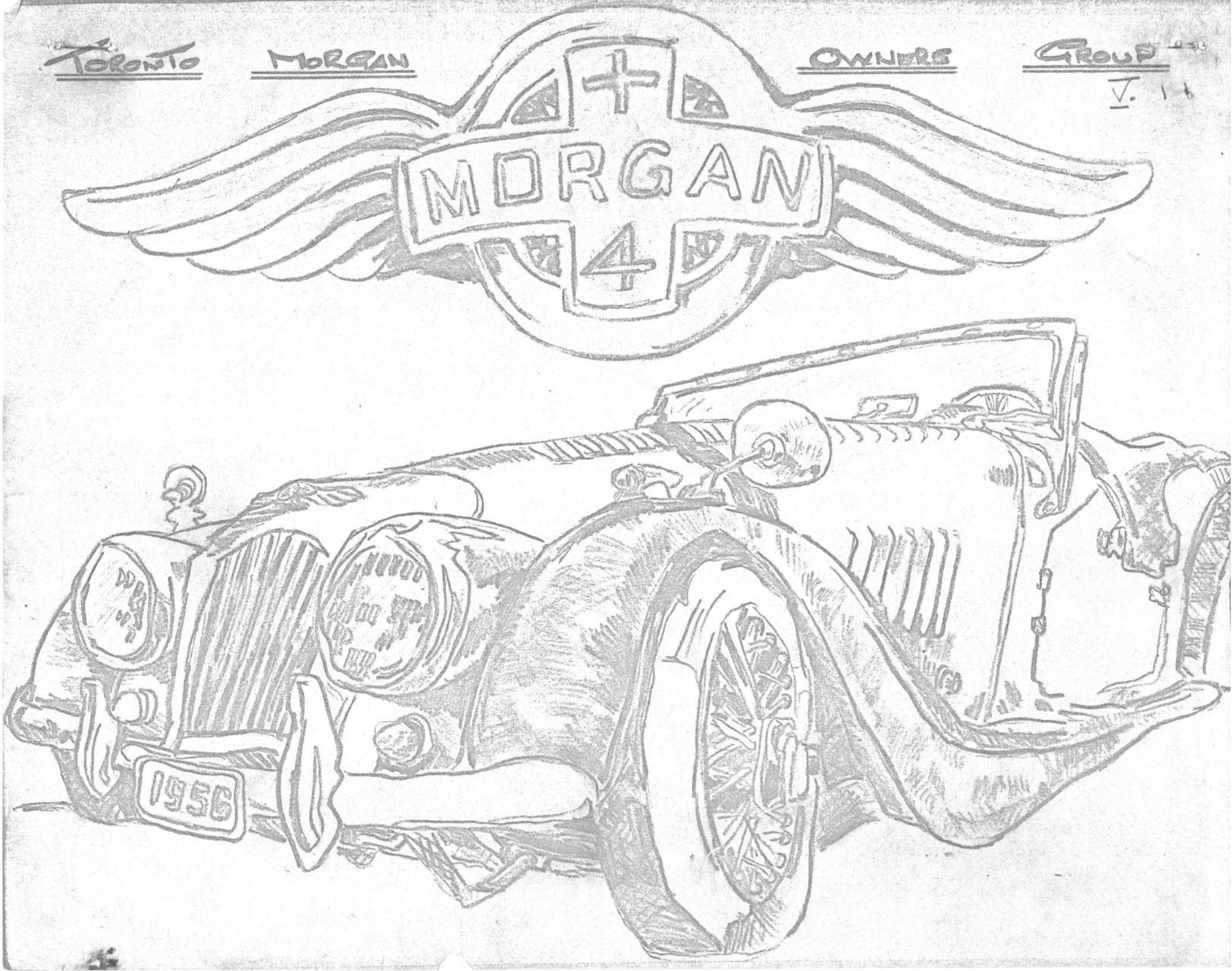

TORONTO MORGAN OWNERS GROUP

VOL. NO. 1

Notes from the editors.

This rather lengthy newsletter comes to you from your regular threesome, Dave Smith, Norn Hendrycks, and Mike Geluch.

This newsletter (in size only) will hopefully come out again next year at the same time with as much information as we can pick up over the year.

The Toronto Morgan Owners Group will journey into the coming year a little better prepared and knowledgeable on what sort of event and outings to plan, but our basic philosophy will remain the same, That is a loose knit organization with no demands on any of its members to participate, but we would like and hope you do, and to provide help, consolation and information when ever we can as to Morgans and thier operation.

The following pages hopefully will be of assistance, enjoyable reading and comfort to some or all of you..... some of the information is ours and the other belong to Morganeers south of the border in Washington and Califorina.

II

MORGAN MILESTONES

1909 H.F.S. Morgan builds his first three-wheeler for personal use

1910 Morgan shows his first production run - two cars. Both are three-wheeled and single seat. One has a 4 hp engine; the other, 8 hp.

1911 Public pressure forces the introduction of a two-seat, 8 hp model. At this point, orders exceed the production capacity of his small garage. Morgan approaches several large companies to take over manufacture. There are no takers so he expands on his own.

1912 A Morgan brings in the first of many of racing's major awards with a 60 mph win at the Brookland International Cycle car race.

1915 First four-seat Family Runabout produced.

1918 End of World War I brings a need for lowcost family transportation. Production jumps to 50 cars per week.

1931 After a long period of engine and body changes, Morgan introduces a model with three forward speeds plus reverse.

1933 Another new three-wheeler is introduced powered by Ford four cylinder 8 or 10 hp engines.

1936 First four wheel design introduced: the Morgan "4/4" (4 cylinders/4 Wheels)

1938 Standard Motor Co. builds a 1,267-cc, 9-hp engine for the Morgan. Production continues on two and four-seat three wheelers fitted with 10-hp Ford engines.

1939-44 World War II forces Morgan into the munitions business. Only repair and spare-parts sections do any automotive work.

1945 A time of transition as Morgan gets back into car manufacture. Production begins with a 4/4 model fitted with a 1,267-cc Standard engine.

1947 Morgan begins to set up its overseas distributor network.

1950 Three-wheeled Morgans are discontinued and the "Plus 4" with a 2,088-cc Vanguard 68-hp engine is introduced.

1954 Body styling is changed.

1955 TR 2, 90-hp engine becomes the power plant of the high priced version. An economy version, the 4/4 Series 2 with a 10-hp Ford engine, goes into production.

1956 TR 3, 100-hp engine is combined with an aluminum body for a limited production racing car.

1962 4/4 Series V with a 1,500-cc Ford engine introduced.

1963 "Plus Four Plus" makes a brief appearance with a TR 4, 105-hp engine. Sports-car enthusiasts considered the car "not in the Morgan image" and it is discontinued after a 50-car production run.

1968 The Plus 8 debuts at the Earls Court Auto Show. Power is supplied by an

Price change for purchasing a Morgan in England as of Dec. 1972

			old	new
4/4	1600	2 seater	2820.00	3087.50
4/4	1600	4 seater	2887.50	3337.50
+8		2 seater	3822.50	4387.50

These prices should make some of us sick who purchased them new, and more so those who have purchased in the last two years at the inflated price.

We have formed association or membership with one of the following groups

Great Lakes Morgan Club	Detroit, Michigan
Washington Morgan Club	Washington, D.C.
Califorina Morgan +4 Club	Los Angeles, Califorina
Northern Califorina Morgan Club	San Francisco, Califorina
M.G.T. Register	Toronto, Ontario
3 Wheeler Club	London England
Ottawa Morgan Owners Group	Ottawa, Ontario

All these groups produce excellent newsletters and monthly booklets which are very interesting, so anyone requiring further information about these groups can contact one of us.

STORING THE MOG sorry if its a little late
re Wash Mog Club

1 Wash car thoroughly and give good waxing
2 Clean interior with mild soap and water
3 Preserve interior with lexol
4 Top up oil and add S.T.P.
5 Install anti-freeze
6 Deflate tires about 10 lbs below normal(take off and put in the house if energetic)
7 Place car on blocks
8 drain gas....leave about a gallon
9 Start car to clean out the gas...beats sucking on a hose
10 Disconnect the battery
11 Cover the car with a blanket
12 Periodically start the car with new gas, top up oil and use the"one shot"
13 When spring arrives change oil, oil filter, gas filter and add new fuel

NOTE I personally have found that by leaving sufficient gas in the car and starting it every few weeks and letting it run for a while with everything working I have less problems in the Spring, besides I'm actually to lazy to add gas each time.

EVENING JOURNAL
WILMINGTON, DELAWARE / WEDNESDAY, MARCH 29, 1972 31

Varoom! Double Zowie! A Tribute To a Whatizzit Car—The Morgan

BY BOB SCHWABACH

To the culturally deprived and intellectually indigent, a Morgan looks like the old MG. Anyone who has ever owned a Morgan would never make that mistake.

It may, I will reluctantly grant, look a little like the Model TF MG — though the differences are so marked that it is difficult to see how anyone could seriously maintain this for long — but vastly different from the more common TC and the final TD model which went out of production sometime in the early 50's.

Most people would claim that they had never seen a Morgan motorcar in their lives. And though this is unlikely it is possible — I, who own one, now in sick bay, have seen only three in the past five years.

So what follows is a little educational dissertation and also at a free advertisement for a car that is not advertised anyway and does not need to be, for the last of the pure sports cars.

If you ever saw one you would think it was an antique car out for its annual drive to keep the axles from rusting. That's because the Morgans today look virtually identical to the Morgans made 30 years ago, when the company made its only big engineering change by adding a fourth wheel to the three the car originally drove on.

The fenders — "wings" — flare out over the front wheels and hump up over the back. The doors are scooped and the driver sits deep down in a cockpit from which he can peer over the long hood with ranks of louvres cut into the metal to let the engine heat blow out. The hood is held down with a leather strap.

From the back, the car is visible as little more than a spare tire bolted onto a chassis. It is what a car is supposed to be: a machine for driving and no decorative nonsense.

For about $4,500 the buyer gets a car with a four-cylinder engine that the manufacturer claims will accelerate from 0 to 100 miles per hour in 19 seconds and hold the road as if it were tracked on rails.

That, like everything else about the Morgan Motor Co. of Malvern, England, is highly conservative.

On six acres which include a cricket field, a work force of 75 labors in a series of low one-story sheds to produce nine cars a week — 10 if the sewing ladies come in on Saturdays. It's the only automobile factory operated as a cottage industry.

For several years Peter Morgan, owner and son of the founder, has mulled over whether or not to reverse the direction of the production line, which runs against the slope of the floor. A few years ago he told a reporter, "We'll have to do something about that one day."

But there's no hurry. The company used to produce just one car a day but made a big gain in production when they asked the painters to use spray guns instead of brushes.

Still, even 10 cars a week is not a lot, and there is an eight-month waiting list for buyers. But nobody minds. "I suppose they all are a bit odd," Morgan says.

On the steel crossbar chassis is built a frame of English oak. On to this is screwed and bolted a body of molded sheet metal four times as thick as the body metal used on American cars.

The seats are inflated innertubes stuffed into leather cushions and dropped onto a little plywood box for support. There are no windows except the windshield — the company provides plastic side curtains which can be bolted onto the doors, for those who must have such dandified things — and the top is an affair of rubberized canvas which can only be put up by getting out of the car and clipping it with spring clips and catches to the windshield and the body.

Mechanically, every car made is a compromise. Just as the best hi fi sets are still those put together from components rather than the slapped-together compromises one buys at the discount store, so the Morgan innards are components matched for the best compromise in a car that should perform like a racing car but still be driveable on the streets. (The racing cars you watch on television are not driveable in street traffic.)

The standard Morgan has for many years come with a Triumph four-cylinder engine, though there are many possible variations on this. The transmission is a Moss gearbox of the same kind that used to be standard in the old low-slung Jaguars that dominated the racing scene in the 1950s.

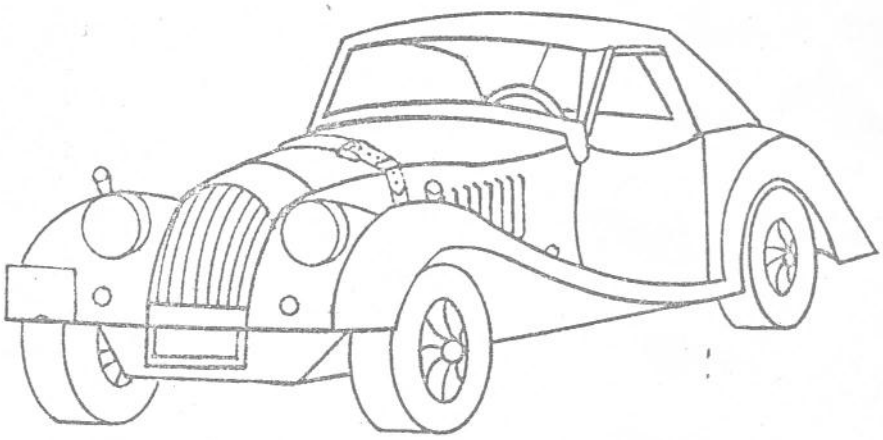

Drawings by Nancy Butler

The "bug" that gobbles beasts of the road

The drive train and rear axle is a Spicer of the same kind used in Ford one-and-half-ton pickup trucks. The steering is rack and pinion—the only kind that always responds accurately and tightly to the wheel. The brakes are disc, developed by Lockheed for stopping airplanes on landing. The electrical system is by Lucas and the instruments by Smiths of Enginad.

In the owner's manual, it states succinctly that it is expected that the owner will wish to do much of his own servicing and repair. Of course. Actually this is best, because most mechanics will just throw up their hands if asked to work on a Morgan.

To insure good performance the manual offers such instructions as "advance the timing so that the engine will be just heard to 'ping' while pulling hard in third gear up a 15 per cent slope." Right.

"To prepare the car for high-speed touring, replace the spark plugs with hot plugs, such as Champion L-10's, increase the valve clearances from 12-thousandths to 15-thousandths of an inch and advance the timing to fire at top dead center."

Incredible as this seems to the new owner, a few tries and he can perform this setup in about a half hour. You then learn what Mr. Morgan means by high-speed touring. He means 100 miles per hour and up.

The first time I performed the recommended adjustments I was radar clocked by a trooper in upstate New York at 117 miles per hour going uphill in the Adirondack mountains and with the pedal not depressed all the way.

Even though the car looks antique, it looks fast, and when you pull up to a stop light or a toll booth, it seems to bring out the beast in every other driver under 70. You hear the staccato varoom, varoom . . . blat, blat . . . to one side and look over to see some otherwise normal, conservatively dressed, corporate type looking at you out the window with a kind of Satanic grin on his face.

The mature Morgan owner will ignore this sort of thing. Early on, I must admit, I succumbed to the challenge. It must have been a unique experience to many of these bravos, to watch a car accelerate quickly to about 50 miles per hour and then hear it peel rubber as it shifted up to 80 or 90.

Mine had, and still has, a Triumph TR3 engine, but I have known some owners who preferred still more power and ordered their cars with Chevy V-8's. The result is almost beyond belief and should not be experienced outside of an airport runway.

Because, you see, the car weighs only 1,700 pounds, and this is so carefully balanced and mounted that on a level road a grown man can push it with one hand.

Like all true sports cars, and any car that is built for good road handling, the wheels are at the corners—there is no overhang of metal, as there is on American cars. Metal beyond the wheels moves the center of gravity out of its correct suspension point at a locus midway between all four wheels and at about three-fourths of the wheel height.

With wheels at the corners, if the suspension is right, you have a car that will hold the road in a hairpin turn at 60 miles an hour. To do that the suspension must be hard—the soft springing and air-cushion ride beloved by American motorists and trumpeted in car advertising also destroys the car's road-holding capabilities and induces swerving and—FACT—contributes to accidents. In a Morgan the suspension is so hard that when you ride over a manhole cover you can count the pips in the iron.

The long hood is not to contain the massive engine, there's plenty of space left over. It's to shift the driver's weight back along the axis and near the fuel tank, so the center of gravity will be right. The Morgan carries this to such extremes that the 12-volt electrical system uses two six-volt batteries wired in series, one on either side of the car so that even the weight of the battery will be evenly distributed.

For all this the Morgan Motor Co. offers no guaranty and no warranty. None of your come-on 50,000-miles-on-all-parts and 10,000-miles-on-labor.

"The Morgan Co. does not offer a guaranty," the owner's manual states, a little haughtily. "The greatest care and diligence having been exercised in the construction, it is assumed that the buyer will himself have examined the car thoroughly before purchase and be satisfied that all is in order." Ah yes. That all is in order.

A new Morgan does not "turn over" for a few seconds when you switch on the ignition. It starts, instantly. Should incredibly bad luck cause you to leave the lights on and drain the battery there is a crank under the hood—"bonnet," to be precise—and with a single turn at the front, the engine will fire. Don't forget to pull out the hand choke.

How come you never heard of the Morfgan?. Well, they don't advertise and they don't enter races, which would be in slightly bad taste and also expensive.

Most Morgans sold are the Plus-4 model. But for the absolute nut they will sell a Super-Sport model, for around $5,000 and change. This enables you to stay up there with the $20,000 Maserattis and Ferraris. Back in 1961 or 62 a French count bought one and entered it in the Le Mans Grand Prix at his own expense. He won.

For a while, back in '68 and '69, you couldn't buy any Morgans in the United States. Congress passed new safety requirements such as collapsible steering wheels —and presumably spongey springing and sloppy steering too — which the Morgan did not meet.

After a while, Morgan received a number of pleas from American fans and agreed to meet the American requirements. In doing so, he had to test-crash three completed Morgans to prove the car was "safe." "It broke my heart to do it," Morgan said.

My own Morgan Plus-4, terribly sad to say, is hors de combat. Near fatally so. I can lay none of the blame on Mr. Morgan and his estimable crew, even the sewing ladies. It rolled into a deep creek in Kentucky some time back and has never been the same since. There was a crayfish in one of the carburetors when the tow truck pulled it out.

It rides like crazy but it'll never float.

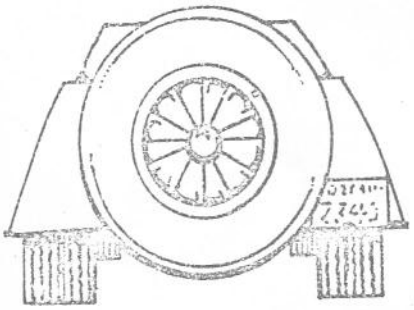

High styling in the rear

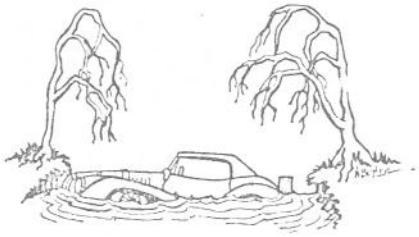

Flunking the float test

from M.J. McKusic, Wilimington, Delaware

MORGAN MEANDERINGS

by Mort Kuff

Morgan owners are a mixed bag of individuals who are literally possessed by a singular breed of road machine.

Unlike cat-owners, who are also dominated by their pets but who never fathom the inner-workings of the animal, Morgan-owners are intimate with their masters.

There is a special 'dignity' about a Morgan. I have never heard a MOG-owner refer to his machine as "she". Nor is it a "baby". There are no rally-stripes, decals of beasts or birds of prey. No owner has ever been seen to display the utter bad taste associated with hand-painted nicknames, initials or other 'un-authorized" designs. Perish the thought!

A Morgan is very nearly the most personal association a man may have, excepting a family heirloom or the key to his liquor cabinet (his wife and kids never had a chance).

A Morgan is more a state of mind than a piece of machinery.

How else can one explain the complete devotion to this odd combine of wood and metal. Despite the hardship, discomfort, expense, abuse, mis-understandings, and shouts of " looka-that-ol-MG ", Morgan owners are fiercely loyal to the breed.

Morgans fall into two major categories: Restored (or in the process) and Ratty.

Some folks are of the opinion that ' new ' Morgans deserve their own classification. Heresay, I say, rubbish. My mind is made up! A Morgan isn't a Morgan until it has begun the aging process.

Let's delve into the two accepted (by me at any rate) categories.

A Restored Morgan is:

Any Morgan that has been given a bit of care or received any attention whatever during the past ten years. (A brief swipe with a smutty rag qualifies.) Some cars have been given a casual once over with rust remover. This, of course, qualifies the owner to claim a complete, factory-like restoration. Only an infidel would contest this definition.

Some afficianados have gone to extremes in reconditioning their machines. Such efforts have taken the form of: vigorous sweeping of floor mats, scraping squashed bugs off the windscreen...and other similar activities, up to and including one wierdo who actually removed the head from his engine and replaced a gasket and a whatever.

A Ratty Morgan is:

A machine receiving less attention than that described above.

Now, let us examine the anatomy of Morgan ownership.

There is a significant manifestation of the Morgan syndrome which I choose to label: Reverse Snobbery.

It goes like this: While most car buffs seek to TRADE UP to a mint condition, factory-fresh machine...quite the contrary is true of Morgan-eers.

Once a chap is possessed by a Morgan, he seeks to TRADE BACKWARD! .....to ever more ancient models...ever more decrepid machinery, until at last, with luck smiling his way...he becomes the proud owner of a 'basket-case' ('sigh')

This means, of course, that our friend has traded himself out of transportation altogether, until the 'case' is restored. (and this is seldom accomplished in one owner's lifetime.)

One 'basket case' Morgan; no transportation. That's Class!

For the unitiated, we profer a few tips on recognition of the Morgan-Owner.

First, we admit that no more grotty group of ambivalent Anglophiles exists than the Morgan-Owners.

And, admit it or not...they are all Anglophiles. Things British never fail to snare them. This fierce loyalty to Mother England can, at times, cause mixed emotions in the MOG-ee.

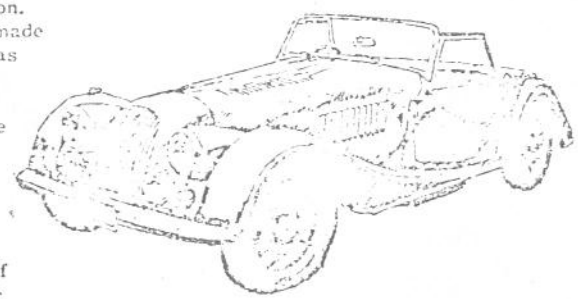

For instance, in that enviable situation such as the chap with the 'basket-case' finds himself, there could be a gloomy aspect. I've heard that there are those who find it necessary to actually earn their own livelihood. And, in the course of doing so, also find it necessary that they travel to and from their labours. This could mean a car OTHER than the Morgan.

The requirement for 'reliable transportation' has led more than one fellow to the economy car path. When such a predicament has resulted in the purchase of a little German job (or French or Italian), well..... For the most part, Morgan-owning gentlemen have displayed their up-bringing by having the decency to play this sort of thing discreetly. And, by keeping to the back roads.

Even within the clan itself, recognition of a Morgan-Owner is considered to be a semi-science.

There are subtle tip-offs that can be recognized by no one other than a bonified Morgan-ite. These subtleties distinguish the seasoned owner from the Neuvo-MOG.

Details such as finely cracked paint in the fairing between the headlamp housing and the fender can cause a knowing smile to wreath the corners of the mouth of a genuine MOG-Owner.

A wobbly front wheel, certainly nothing unusual to autos of foreign manufacture... ah, but another MOG-Owner knows exactly how that wheel became wobbly. He is able to conjure up the painful picture of bouncing over bumps and having his teeth rattled along with his car's wooden chassis. Sympatico!

Another dead giveaway is the dependable curiousity of MOG's. And, that anticipatory 'twitch' that precedes the sighting of another Morgan. Usually heading in the opposite direction and often causing that rare phenomenon, 'side-ways' whip-lash. Such sixth sense can be disconcerting to the non-cognizenti. Poor them.

Still another idiosynchrosy of the MOG-squad is their lean stature. There simply are no fat Morgan owners. Well, there may be fat owners but certainly no fat owner-drivers. It just wouldn't work, Space-wise I mean.

As a rule (as in the exception proves the...) Morgan-owners run to the austere. One cannot imagine a Mog-ite dining on rich cremes or fancy fare. Quite the contrare! The true Englishman-in-Disguise prefers the Beef n' Ale type menu. And, if there is no beef...he has more ale. And if there is no beef...let's have some more ale!

The creed declares that luxury, pretense and sophistication, be eschewed.

Bottom-line basics, minimal components, Spartan-like essentials. Ah, that's the road for me.

Purity of line, beauty of function, honesty of essence...these are MORGAN qualities. Unbashed sentiment. Unwavering loyalty. (By God, they just aren't making things like they used to! Whatever happened to Craftsmanship? Doesn't anyone give a damn anymore?)

In this embarrassingly dreary world of plastic-plated-fads-and-flops, Morgan stands very nearly alone as the remaining Classic Machine. And indeed, of the classic modus operandi .

Doff hats to the CLASSIC! (and put some tape over that leak in the canopy)

Shop Talk "Cheap Tricks and Roadside Repairs"

This article has to be dedicated to Ed VandenBossche. Ed not only acted as consultant and suggested many of the items, but he has gained a fair reputation as a Mogman who believes in a maximum of driving and a minimum of "tinker time".

Let's start with roadside panic. Like what do you do when you're out on a picnic with your honey and when the "nature ceremony" is completed; you grope around in your jeans and find no key! You hot-wire, of course. On older models, all you have to do is take the horn fuse (under the right-hand bonnet, on the scuttle) out, and jam it into the space between the fuse clips. On later models with key-start, you will have to punch the button on the starter solenoid to start the engine. On cars with the new buttonless solenoids, you may have to push-start. Another way would be to carry a short clip-lead in your tools, and hook it to the terminals behind the switch. (You'll know which ones when the ignition light goes on.)

About those fuses, if they blow, and your car stops, jam in a paper clip, or any little wood screw, or wrap the fuse in foil. (Just until you get home, of course)

What if your throttle cable breaks while you are on the way home at 3:00 A.M.? Set your idle-adjustment-screw up to 3000 or 4000 revs and limp home. If the clatter bothers you

at stop lights, limit your R.P.M's by turning off your ignition switch until the revs reach 500 and back on until... etc. I once got home using a piece of string from the SU's, over the engine, through the top louvers and around the windscreen; operated by hand.

By the way, Dirty Ed's solution to the short throttle cable bears some notice. So you get home by some clever dodge, you find on close inspection that your cable broke <u>at</u> the carburettor. It <u>just</u> won't reach. Take the whole shebang off of the front carb, and install the whole mess on the rear one; shortening the cable and housing by a foot or so. Don't try this in an emergency situation. The mounting bracket hole needs to be largened. There are a couple of interesting results of this modification: one, you can use easier-to-get cables and housings, like Sprite; two, you can lighten-up the return springs. (Ed uses only the springs around the shaft.) This gives you in effect, a "Tijuana Tune-up" Your car seems to have better acceleration, and get immediately snappier.

Can you get home if your clutch gives out? Some do. It takes a little practice and some nerve. What you do is shift clutchlessly. At the instant you take your foot off the accelerator, you jerk it out of gear, then when the revs fall about 1000, you jam it into the next.

gear. At full stops, switch off, put it into first, start. Yes, it should start while in gear, and while rolling. In an emergency, you'd be surprized how well you can shift.

Now for the quickies.

Remove your radiator support rods. They only add damaging vibrations to your radiator. Your hoses will hold the radiator. You will want to put a spot of padding on the front corners. The radiator can lurch forward and put out-dentations in your cowl.

Fuel starved. Remove the fuel line at the pump, blow back into the tank. It's usually dirt in your tank.

Thermostat dead. Break the bellows into open position. Don't throw it away. Your system may need the constriction at that point.

You know those pesky little round keepers on your SU's? The ones that hold the choke together. Wire them on with bailing wire. They'll stay.

When you rebush the front end, save the tall king-pins. Stuff them into the front suspension tubes. They add strength, rigidity and may even help to true them

Of course these aren't but a small fraction of the "handy-dandy-little-hints" used on Mogs. If you have a favorite, send it in. We'll be glad to give you credit, or not, as you choose.

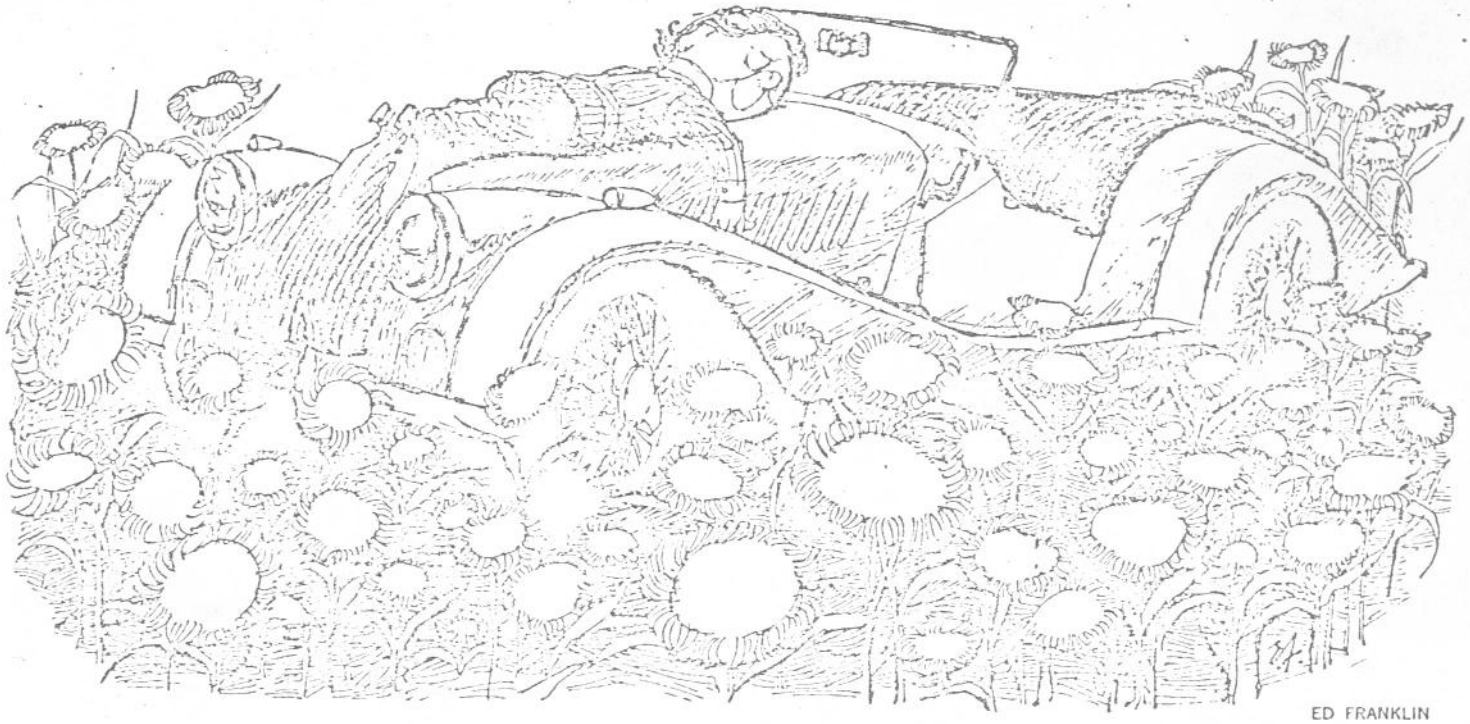

ED FRANKLIN

MY HEART BELONGS TO MORGAN

BY LESLIE MILLIN

About 20 new Morgans are sold each year in Canada, and I suppose about as many used ones, and everyone buying a Morgan for the first time is buying an automotive virus that will settle down in his bloodstream happily and forever.

Not for the rest of you to have rainwater in your ear and slush in your lap, and a perpetually roasted left ankle, and scar tissue on left knuckles from hitting the horn button every time you turn the wheel.

The Morgan is a car whose heritage goes back more than half a century, almost always delivered in open, two-seater form. It is made in a small factory in Malvern Link, England, largely by methods that would not have seemed odd or advanced 40 years ago. Automotively speaking, it is one of the last of the dinosaurs.

Specifically, the Morgan uses a front suspension designed by the company founder, H. F. S. Morgan, well before the First World War. It has a frame made of fine English ash, a rear suspension which is only slightly developed beyond what most Edwardian sporting cars boasted, and body styling which—although undeniably handsome—must have looked slightly old fashioned when the present basic shape emerged in 1936.

The elder Morgan, whose son Peter took over the business after his father's death a few years ago, was a clergyman's son who studied mechanical engineering around the turn of the century and devised a three-wheeled runabout as a way of getting around the countryside. Three-wheeled vehicles were not uncommon when the automobile was young, but Morgan's front suspension design was distinctly unusual.

He used (and patented) a sliding pillar method of independent front suspension, most unlike the standard practice of the day, which was simply to hang a beam axle from the front of the vehicle and put a wheel at each end. Morgan's sliding pillar design, according to the Morgan company, has "since been used with every satisfaction."

Sometime in the Nineteen Thirties, H. F. S. Morgan noticed that four-wheeled cars had come into vogue, and accordingly designed the radically new and different Morgan 4/4. The model designation indicated, albeit somewhat tersely, that the car had four wheels and four cylinders.

After the Second World War, the Morgan 4/4 continued to be produced without much change. But in 1950, a new model was introduced: the Plus 4, with a bigger engine and more power, after 1955 supplied by a TR2 engine. The Plus 4 initiated me into Morganhood.

Driving the Plus 4 was work, no doubt about it. The steering wheel had to be heaved around, and the pedals required a firm foot, and through it all the driver had to hang on tightly because the harsh suspension transmitted a great deal of the road shock to the driver.

The Plus 4 driver sat on a small cushion on a small plywood platform placed directly on the floor. The cushion was the inflated bladder type, basically a balloon. The common seatback was of the same, so that when a large passenger sat down hard, the driver was propelled into the steering wheel.

Since the whole car was so light, so flexible and so relatively free of crossbracing, vibration throughout was something of a Morgan specialty.

The rearview mirror was obviously something distrusted at Malvern Link. On the Plus 4, it was just a small mirror with a suction cup on the back, to be attached to the windshield at the driver's whim. The vibrations of the car rendered the mirror useless at any speed much above 10 miles per hour.

It was largely redundant anyway, because no Morgan driver worth his salt would drive with the top up except in very extreme conditions, so the easiest way to see what was behind was for the driver to turn his head.

Putting the top up was so difficult and time consuming that most Morgan owners simply said the hell with it, particularly since the car was just as drafty with the top up as with it down. The Morgan was designed so that a driver could escape the rain with the top down by driving a little faster.

Like many other Morgan owners, I drove mine with the top down in both summer and mild winter on the West Coast, bundling up in a duffle coat during periods of heavy frost, and keeping the passenger seat and the luggage space behind the seats covered with the tonneau.

This meant a certain amount of rainwater in the ear, admittedly, and in winter passing trucks were wont to dump slush into one's lap over the low, cutaway door, but the only time it was the subject of genuine discomfort was the day I was caught in a hail storm, which made the Morgan clang like a bell by bouncing egg-sized hailstones off the bodywork of both the car and the driver.

Ah, but there were advantages.

The Morgan Plus 4, even if just delivered, looked at least 30 years old. A fat Detroit musclecar sitting at a stop light could easily be induced to engage in some mild drag racing, and unless the musclecar's driver was exceptionally alert, and possessed a car with substantial bite in its clutch, the Morgan would be well down the block while the musclecar was still getting off the line.

On a wet road, the Morgan would outrun anything short of an "out and out" sports-racing car. When H. F. S. Morgan designed the suspension, he somehow built in—apparently because of the flexibility of the chassis—an amazing ability to deal with slightly slippery surfaces. (The other aspect of this flexibility was that if the car was parked on a very uneven surface, the body could twist enough to jam the doors.)

Morgan owners, in any case, felt superior to the drivers of mass-produced sports cars ("assembly-line junk"), Detroit musclecars ("juke-box styled jokes"), Jaguars ("Yankee sell-outs, though of good stock").

But the others kept improving their machinery, and Morgan was forced to do likewise. Adopting the 3,500 cubic centimetre Rover V-8 engine raised the horsepower to 184 from about 115, and since the weight was not markedly increased, the Plus 8 has quite remarkable acceleration.

It still looks like an honest car, a car that looks like what it is, something for drivers only, not passengers with luggage.

Many of the other automotive dinosaurs—sports cars like the Singer, the Squire, the Lea-Francis, Bugatti, Delahaye, Frazer-Nash, Invicta, Lagonda, and Mercer—have sunk in the swamps of mass production, never to emerge. Morgan lives, and even if there has been evolution not entirely pleasing to the eye of a Morgan fancier of earlier times, a dinosaur is still well worth having around.

GIRLING
THE BEST BRAKES IN THE WORLD

		10 H.P. 4/4 Chassis 1701 on 1945–50		Plus 4 1950–55		Plus 4 Chassis from P3333 1955	
		Front	Rear	Front	Rear	Front	Rear
	Illustration Size and Type	No. 2 9x1¼ GNS	No. 2 9x1¼ GNS	No. 5 9x1⅛ HLSS	No. 4 9x1⅛ HW	No. 5 9x1⅛ HLSS	No. 4 9x1⅛ HW
	Complete Brake	GB35809–10	GB35819	GBB41116–7	GBB41786–7	GBB44693–4	GBB41786–7
10	BACKPLATE ASSY.	GB35811–2	GB32407	GB40444–5	GB41785	GB44695–6	GB41785
15	Steady Post		GB37148				
17	Nut		10132				
50	Bridge Pipe			394320W		394320W	
51	LINED SHOES—Leading LH	GAG2240	GAG2240	GBB41144	GBB41114	GBB41332	GBB41114
51	,, ,, —Trailing LH	GAG2240	GAG2240		GBB41115		GBB41115
51	,, ,, —Leading RH	GAG2240	GAG2240	GBB41145	GBB41114	GBB41333	GBB41114
51	,, ,, —Trailing RH	GAG2240	GAG2240		GBB41115		GBB51115
55	Service Kit—Spring	SP1503	SP1503	SP1504	SP1525	SP1504	SP1525
80	H.P. HOSE			3700628W	3700625W	3700628W	3700625W
100	WHEEL CYLINDER ASSY.			390320-1W(⅞)	390120-1W(⅞)	390320-1W(⅞)	390120-1W(⅞)
110	Service Kit			SP2049	SP2050	SP2049	SP2050
111	Spring			378821	378821	378821	378821
112	Seal Support			317031	317231	317031	317231
113	Bleed Screw			377686W	377685W	377686W	377685W
114	Ball				27240		27240
115	Dust Cap			363400	363400	363400	363400
120	Service Kit—Handbrake Att.				SP1005		SP1005
121	Draw Link				481842		481842
128	Dust Cover				GB41326-7		GB41326-7
129	Cover Plate				GB40559		GB40559
131	Joint Washer					GB43034	
132	Dust Cover Retaining Plate				GB40995		GB40995
158	Nut			30–BS–61	GB41158	GB41356	GB41158
158	Nut					30–BS–150	
160	Washer			40–S–31	GB537	76–BS–25	GB537
162	Split Pin				50–BS–8		50–BS–8
200	EXPANDER ASSY.	GB38112–3	GAG2399				
211	Tappet 1 and 2 Shoe LH	GB1403/1	GB1403/1				
211	Tappet 1 and 2 Shoe RH	GB1403/1	GB1403/1				
215	Split Pin	50–BS–19	50–BS–19				
217	Rollers	GB535	GB535	—			
218	Plunger		GB1404				
221	Cable Assy.	GB38114					
221	Cable Assy.	GB38115					
222	Pin		GB67				
223	Barrel Nut		GB1305A				
250	Operating Rod		GB543	—			
256	Washer	GB537	GB537				
256	Washer	45–BS–1	45–BS–1				
259	Nut	GB5236	GB5236	—			
263	Service Kit—Dust Cover		SP1202				
300	ADJUSTER ASSY.	GAG448	GAG448		GB40875		GB40875
310	Service Kit	SP1192	SP1192		SP1194		SP1194
352	Bolt	GB2094	GB2094		GB41132		GB41132
353	Washer	GB539	GB539		GB539		GB539
	ILLUSTRATION AND SIZE			No. 101 ¾ CB		No. 102 ¾ CV	
500	MASTER CYLINDER ASSY.			3102343		3112344W	
510	Service Kit			SP1975		SP1967	
511	Spring			378825		378847	
513	Push Rod			350911		350511W	
514	Retaining Washer			378234			
515	Jaw End			373050		373201	
516	Locknut			10132			
524	Banjo			352203W			
525	Banjo Bolt			376207W			
526	Stoplight Switch			398000		398000	
530	Filler Cap					378430	
	ILLUSTRATION			No. 109			
570	SUPPLY TANK ASSY.			3000521			
576	Cap			378430			
577	Cap Washer			362920			
583	Clip			378920			
584	Screw			18819			
585	Nut			10800			
586	Adaptor			374304			

Issue 2.
Morgan.

GIRLING — THE BEST BRAKES IN THE WORLD

		MORGAN 10 H.P. 4/4 Mk. II From Chassis A200 1956 on		MORGAN Plus 4 From Chassis P3550 1956–58		MORGAN Plus 4 From Chassis 4096 1958–59	
		Front	Rear	Front	Rear	Front	Rear
	Illustration Size and Type	No. 5 9x1¼ HLSS	No. 4 9x1¼ HW	No. 5 9x1¾ HLSS	No. 7 9x1¾ HL3	No. 48 9x1¾ HLSS	No. 49 9x1¾ HL3
	Complete Brake	GBB41116–7	GBB47851–2	GBB44693–4	GBB47228–9	GBB46727–8	GBB46699-700
10	BACKPLATE ASSY.	GB40444–5	GB41785	GB44695–6	GB44703–4	GB46729–30	GB46701–2
22	Service Kit—Steady Rest					SP6002	SP6002
50	Bridge Pipe	394320W		394320W		394310W	
51	LINED SHOES—Leading LH	GBB41144	GBB41114	GBB41332	GBB44705	GBB45792	GBB45796
51	" " —Trailing LH		GBB41115		GBB44705		GBB47989
51	" " —Leading RH	GBB41145	GBB41114	GBB41333	GBB44705	GBB45792	GBB45796
51	" " —Trailing RH		GBB41115		GBB44705		GBB47989
55	Service Kit—Spring	SP1504	SP1525	SP1504	SP1555	SP1573	SP1577
60	H.P. HOSE	3700628W	3700625W	3700628W	3700625W	3700628W	3700625W
100	WHEEL CYLINDER ASSY.	390320-1W(7/8)	390150-1W(1)	390320-1W(7/8)	390430W(7/8)	390322-3W(7/8)	390434W(7/8)
110	Service Kit	SP2049	SP1215	SP2049	SP2009	SP2034	SP2032
111	Spring	378821	378822	378821		378875	378875
112	Seal Support	317031	317241	317031			
113	Bleed Screw	377686W	377685W	377686W	377686W	377686W	377686W
114	Ball		27240				
115	Dust Cap	363400	363400	363400	363400	363400	363400
120	Service Kit—Handbrake Att.		SP1005				
121	Draw Link		GB47926				
122	Lever Assy.				GB44275		GB48042
128	Dust Cover		GB41326–7		GB44280		GB44280
129	Cover Plate		GB40559				
131	Joint Washer			GB43034		362708	
132	Dust Cover Retaining Plate		GB40995				
150	Retainer				GB44278		GB44278
151	Locking Plate				GB44279		GB44279
152	Distance Washer				GB44943		GB44943
156	Nut	30–BS–61	31–BS–11	GB41356			
158	Nut			30–BS–150			
159	Set Bolt					GB49244	
160	Washer	40–3–31	GB537	76–BS–25			
300	ADJUSTER ASSY.		GB40875		GB9001		GB49001
310	Service Kit		SP1194		SP1850		SP1850
352	Bolt		GB41132				
353	Washer		GB539		76–BS–25		76–BS–25
355	Nut				30–BS–150		30–BS–150
	ILLUSTRATION AND SIZE	Brake No. 102 ¾CV	Clutch No. 102 ⅝CV	No. 102 ¾CV		No. 102 ¾CV	
500	MASTER CYLINDER ASSY.	3112344W	3112247W	3112344W		3112344W	
510	Service Kit	SP1967	SP1963	SP1967		SP1967	
511	Spring	378847	378847	378847		378847	
513	Push Rod	350511W	350511W	350511W		350511W	
514	Retaining Washer		378230				
515	Jaw End	373201	373201	373201		373201	
516	Locknut		10202				
516	Nut (Jaw End)		52401W				
526	Stoplight Switch	398000		398000		398000	
530	Filler Cap	378434		378434		378434	
538	H.P. Hose		3700625W				
	ILLUSTRATION AND SIZE		No. 120 ¾				
600	SLAVE CYLINDER ASSY.		3010122W				
605	Service Kit		SP2019				
607	Push Rod		350101				
608	Bleed Screw		377686W				
610	Dust Cap		363400				

Little late for Christmas but could be helpful for the spring tune-up.

Ashwood.

Oliver Lumber Co
85 Vickers Rd.
Toronto

233-1227

Warehouse hours till 4:30
Mon- Fri

If you have a pattern of the wood piece you need....

Modern Pattern Works
25 Civic
Toronto

751-5272
George Lawton

(they've done antiques before)

Morgan Dealers

Mr. Curly Ellis
Metro Motors
2504 howard Ave
Windsor, Ont

Mr. George Sterne
Sterne Motors
3712 Grandview Highway
North Burnaby, 2
British Columbia

Morgan Letterhead Stationary

Mr. Harry Honig
1641 Parquet Court
St. Louis, Mo. 63141

Morgan Books, key fobs, cuff links etc

Mr. Gord Wately
P.O.Box 427
Agincourt, Ontario

A HAPPY HOLIDAY HELPFUL ... glue it to a card, tie a red ribbon, hang it on your tree, its neat. ez

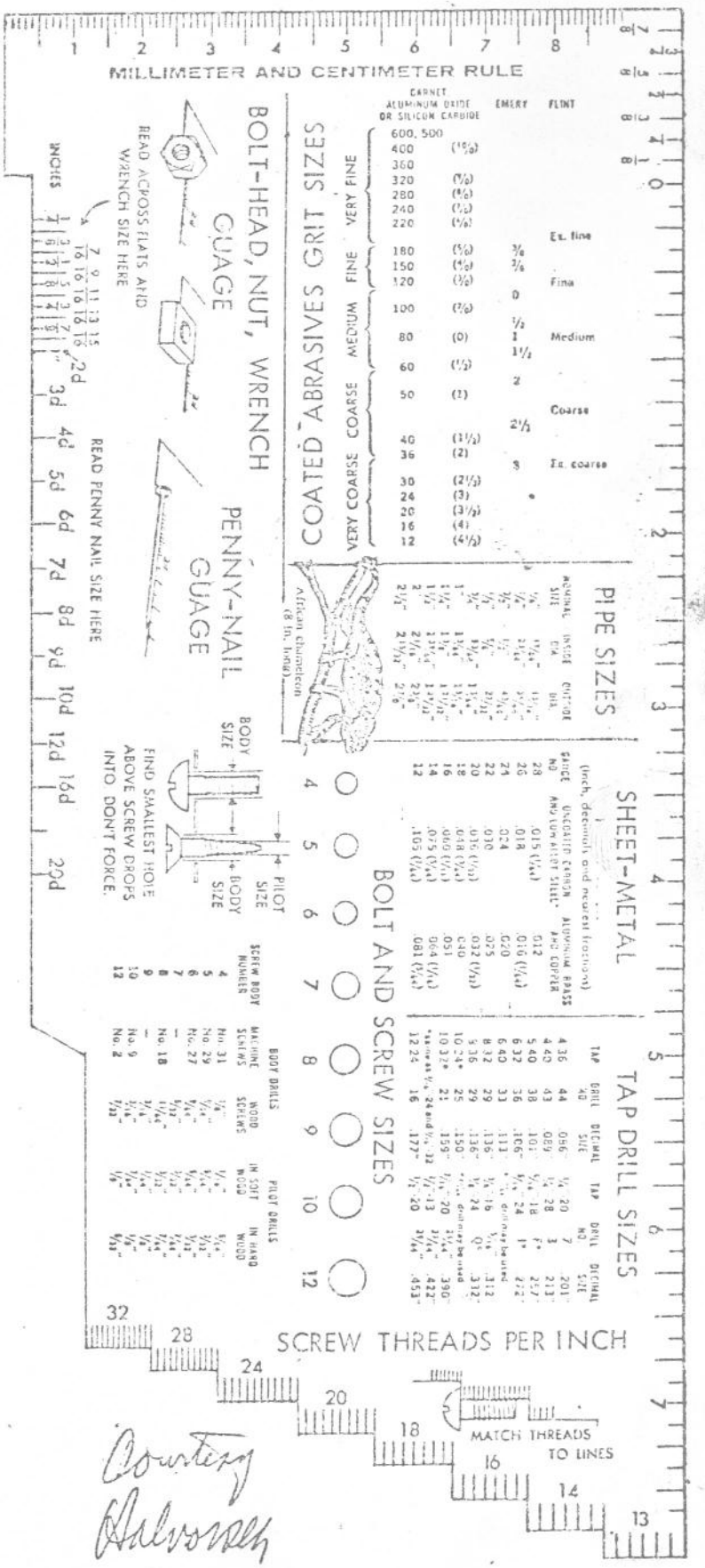

Courtesy Halvorsen

Electrical Parts and Misc

Joseph Lucas Ltd
280 Yorkland Ave
Totonto, Ont

491-3520 Mr. Terry Taylor (he's got one to)

Smith's Instruments
105 Scarsdale Ave
Scarborough, Ont

447-7291

Electrical Problems and help (highly recommended)

Lambton Park Auto Electric
24 Earlington Ave
Toronto

233-7552

Suntester Service Center
218 Evans Ave
Etobicoke, Ont

252-1424 Mr. Ben Kelter (He's got one to.)

Restoration and the such

The new restoration department of Grand Touring Automobile which will be at 71 King St. E... most of Automobilia ex-staff are here and do excellent work, and also very interesting to talk to.

Starter Units

New old stuff for TR 2 and 3 people, still in origional boxes

John Ray
Limerick Center Road
P.O.Box 219
2
Pootstown, Pa. 19464

CARpentry

ALL ABOUT DOORS

Morgan Doors, those funny little cut-down things which let the wind hit your nearside kidney, passengers with muddy shoes step over because they can't open Them and if they can, they slam Them so hard the "Binnacle" pops off and chips on the gearchange lever. By now you have developed a SOP, lift a little here, push a bit, hip It or close with just the right lift and flick of the wrist. With winter near and long Sunday afternoons you might consider some worthwhile maintenance, makes life easier.

There are 16 adjustments per door.....yes 16, not counting the lock mounting screws (4), 4 wood screws, 2 10/24 machine screws per hinge, 2 flat sided hinge pins and 2 woodscrews locating the dovetail rubber. If these are in place and tight or oiled, read no further, return to GO and collect $200.

DOOR REMOVAL - Start with the Door Pillar Hinge side, after removing the Check Strap, lift the Rubber Panel to expose the nuts of the machine screws (these are the ones you could never get tight with a screwdriver) and remove. You now have the Door in your lap and want to bag the whole project. Remove the Lock, lift off the Upholstery Panel, expose the Door Frame, then bag the project. Before removing the hinges from the Door, check to see if the flat side of the Hinge Pin remains parallel with the Door Panel as the Hinge moves, if not, drive the Pin out and examine, file and fit so it does, this will stop the gouge in the Panel. Refit Hinge with shims if needed, tighten wood screws, coat Wood Frame with CUPRINOL, check rusting, undercoat, if you wish, fit a piece of JUTE carpet underlayment as a sound insulation in the Panel. (Doors after '65ish have cut out map pockets so forget the JUTE). It is recommended you use "T" nuts for refitting the Hinges, two per Hinge will do. "T" nuts are self locating, hidden nuts that will require no further Panel removal for future adjustment of the Door. These are a bit expensive, 2 for 25¢, 8 per Door, but if you shoplift with a flair, 50¢ will cover all "T" nuts. If Door requires no more work, remount and relocate the Rubber Dovetail so it mates with the steel cup under the Striker Plate, if not read on.

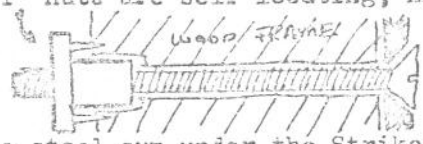

DOOR PANEL RE-UPHOLSTERY is no problem, just some vinyl, contact cement, padding, and those funny little nails ESCUTCHEON PINS, available in Brass, Steel, Aluminum and many sizes. Leather Arm Rests, require some planning, stop at your Salvation Army Store and buy a leather grip for 50¢, this is enough leather for two owners. Remove the old leather - this will give the pattern, sew the end piece from the inside, and fit the new Rest, this is tricky, you might have to retack a couple of times, the Arm Rest is tapered and tends to bend about half way up the Door, be patient. Shoe die will color the new pieces, LENOX Leather Care is recommended for treatment, KNETSFOOT OIL is good but puts a nice stain on your left elbow.

For REALLY ROTTEN DOORS, here is a dynamite technique from Bob Martin in Fort Lauderdale, as you saw the 'original' Door is almost impossible to remake. If the wood is still good, and the Panel is repairable but separated, clean and check all rust, remove the 200 or 300 tacks, braze 1/4-20, flathead machine screws to the Panel. Reshape wood and brace Frame and treat with CUPRINOL, counter sink wood front and back and bolt in place. This will require painting as the welding will blister the paint. If you choose to 'glue' the Frame in place, use MARINE-TEX, available at Boat stores. This is a semi-flexible, non-metalic material that hardens and can be sanded, painted, etc., and still will work with the Frame. Throughout the above procedures, make sure the Door fits before the final step. If it fits and you are happy, do the other things, and install your SUPER DOOR. .....and the next time someone SLAMS 'IT' and says "these goddamned doors never work", smash their g-d fingers with a 1/2 inch Withworth.....EZed

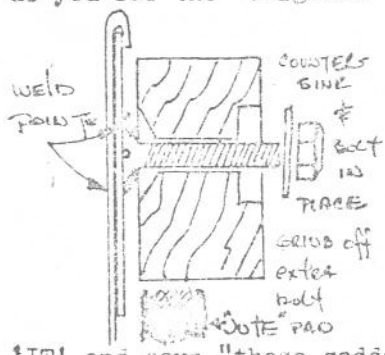

CARpentry

BODYWORK TUNING - II

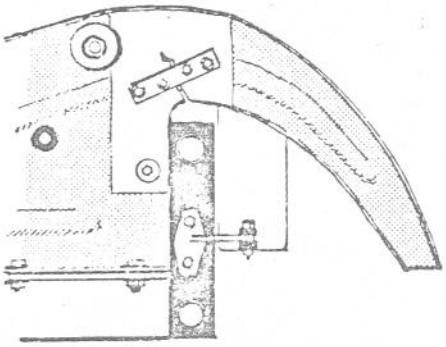

Tuning Phase II. Now we really get dirty.

You have the mending straps and appropriate fasteners in hand - put them somewhere. Study the sketch here. This is how the mending strap will look when in place. Strap goes perpendicular over the crack, if you don't think it's there (the crack) look again, it is. Do not repair now, have to do some other bolts first. Do you see the fat washer just above the crack? Keep this in mind. Now, study the sketch below. The left half is taken at the king-pin, cross-member assembly and the right half just aft of the road wheel. Reference these to your machine and as you locate them, soak the nuts and bolts with penetrating oil. You might ask now, What the hell is going on? Briefly, you are going to relocate and distribute the weights of the wings evenly to all the fixing points on the chassis and all other corresponding body panels. This will in turn relocate the cowl, and grill, shape and effectively control bonnet movement, stop abuse of the wing lights and cracking at the fixing point and hopefully curb headlight flaffing, creaking. Enough? Back to the car.

With the palm of your hand, give the cowl a good shot right above the headlight. If the cowl moves and a lot of rust and broken paint can be seen at the vinal beading, it is wise to remove the cowl. This will require a lot of penetrating oil and a midget's arm, if one's handy, but will expose ten or so more wing locating holes and will allow for proper de-rusting and undercoating of the wing, valence, and cowl shell. Put the cowl aside, this is another, tonight project. Remove the nuts and bolts (four of them) fixing the cowl box to the valence tails, but leave the box in place. (This box will hold everything in place, and act as a guage, when you begin to retune the bodywork.) As long as you are up front, check the radiator mounting and alignment. Look for leaks, clean out the bugs, check the rubber bushes for deterioration and adjust fore and aft location of the rad. A sidetrack, but worth it.

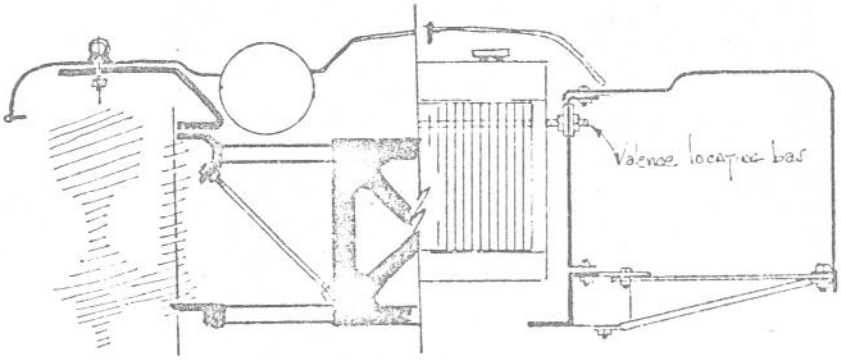

Now, step aside and make a mental note of what you have done. Yep, you've really done it! More of the body is on the ground than on the Morgan, the grandstanders are making book, ominous black clouds are forming just above your left shoulder, and now your knuckles are really bleeding. Now loosen the braces under the wings, both at the wing and the frame. Loosen or remove the wing lights, be careful, these are 6 to 12 dollar items and by design (?) are a vital part in the assembly. Go up top to the valence locating bar (the fat washers), loosen the inboard and outboard nuts, again be careful these are Withworth taps, do not wrench these off. If by chance you do bugger these, you can get a threaded rod stock as a replacement. But try not to, this is by definition, the main gadget of the system "valence locating".

The mending straps, place these over the crack in the valence, drill holes and bolt in place. Wrench these tight, as once they are in, that's it. The valence tail will now take a stiffer shape, you might have to loosen the valence bar a couple more turns to let the valence find its best perpendicular position. Keep your eye on this process once you see what's happening, the rest will be very simple.

The Rest. Oil the valence bar once more. Now, work the valence to the most perpendicular to earth (frame) you can, by tightning the outboard nut (under the wing), or loosening the inboard. A hydraulic jack placed at the wing braces will help bring it into place. Keep in mind the other wing. This also will be moved, so try to do them both at the same time or a bit here and a bit there. If any resistance is felt, check the braces under the wing or the wing lights, these may have to be loosened a bit more. When the valences are in the best position, the cowl box should be a bit loose - this is the sign to look for. Now the wings and valences are in the best position with respect to the frame, wheels, etc. Tighten down the cowl box.

The basic steps are completed, there are some other little nuts to be reckoned with but these are for Part III. Also, next time I'll put some little arrows and things on the above sketch which will help to show what's happening with the forces and "our friend gravity". You know if you let gravity take over, your Morgan will be a paint spot on the pavement.

Ride Easy, EZed

TUNING III. A little more of the same.

Review the last step concerning valence location. The valences now should be parallel, rather stiff, and you should be able to move the car a bit by bouncing (standing) on the cowl box. You might want to smear these nuts with grease or spray, undercoat them, to retard rust, particularly the locating bar. Now, get on your back, Jack.

With a squirt bottle of Varsol, clean the nuts and bolts which fasten the valence to the frame. Tighten these. As long as you're in the area, clean and respace the steering damper blades (Ref. May '72 R.R.). Do not tighten the wing braces at this point, leave them loose. Clean and tighten the nuts which fasten the wing to the valence, start at the firewall and work up to the rad. Same on the other side. If a nut is frozen, break it and replace with the 1 inch pan head $\frac{1}{4}$.20 is great for this detail and will allow a body and lock washer to be used - wrench tight and undercoat.

At this point everything should be looking pretty good, wings centrally located over the center line of the tires and parallel to earth. Let's keep them that way.

The flat iron wing bracket might or might not line up with the side lamp assembly. DO NOT force the wing to meet the bracket, reshape the bracket instead. This is very easy to do; use a bench vise or a big hammer. It should be a tight fit and nice and flat at the mounting points. Ideally, you'll have to lift the wing about a $\frac{1}{4}$ inch to slide the bracket in place - don't forget the hard rubber pad between the bracket and wing. Re-install the side lamp, remember to tape the wires to the bracket to clear the wheel travel.

Now the braces under the wings. Lift wing slightly, position the brace, and wrench tight; this is to remove a couple of pounds of load from the side lamp assembly. At this step you'll want to push, lift and shove the wings, try to "feel" the resistance and balance. Even with the cowl removed, the rigidness will mess with your mind.

The cowl can now be re-mounted. Get a "drift pin". The drilled and worn oblongish holes will look pretty sloppy. It's recommended that you ream the holes with a $\frac{1}{4}$ drill "leapfrog" between the drill and drift-pin. Remember what a bitch it was to get the cowl off, just wait! The hole pattern or cowl shape will determine how it goes back on. Be prepared to remove it at least once to re-ream a hole that doesn't quite match. Then you'll have to determine the bolt sequence; it might be in pairs, top-bottom, or all one side. This might sound dumb because the easy way is to ream with a 3/8" drill and everything just kind of falls in. The mounting technique is your option. The cowl is 80% decorative, but bolting it in place, sandwiches it and the wing to the valence tail. If you can, drive some place and aim for your favorite pothole, then look at yourself in the "barnacle", you'll have a mongoloid grin that won't quit. Honestly, the results of this tuning procedure are very rewarding.

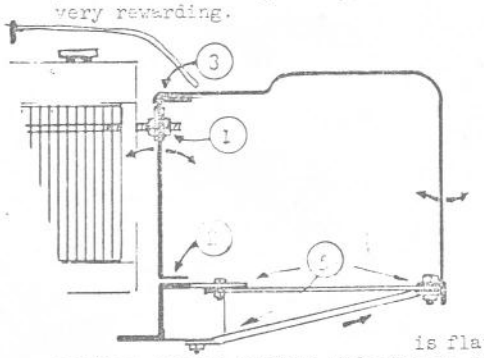

To review the steps: (Refer to diagram at left.)

1. Perpendicularly locate the valence, by adjustment to the "valence locating bar", locate cowl box.
2. Firmly locate valence to frame rail.
3. Firmly locate wing to valence.
4. Position wing bracket, mount sidelamp, (see below)
5. Locate wing perpendicular to road by adjusting braces.
6. Position and locate cowl.

Two things under it all:
(Refer to sketch at right.)
-Be sure that the wing bracket is flat at points A & B, but make sure no contact of the bracket and wing is made at points C & D.
-Also follow this assembly down to the cross axle stay. Examine for play at this point by carefully loading* the kingpin at L and keep your eyes glued to the bottom tube at M. If the tube bends before the car lifts, the stay is loose. This causes the kingpin to move independently of the Z truss for a couple of degrees. Before the body or springs can respond, you've slammed the bracket into the wing, watch the neat cracks develop! This is adjusted with the double nut at N, once more this is a Withworth tap, don't bugger it. The "Yellow Book" mentions it is important not to get the stay in compression or tension. (I can't comprehend this rod in compression and with hand hand tools, tension overload is almost impossible. But be careful.)

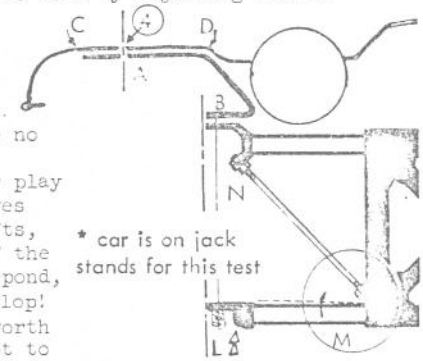

* car is on jack stands for this test

The grill, bonnet and bumper get put back on. As you see the bumper heighth is adjustable and can be shimmed out for a little more clearence at the tips. That's about it.

I might suggest that you develop a maintenance schedule, a realistic one that doesn't get you hung up. The procedure just described was developed over four months of reassembling my + 4. Since completion in late June, 1,940 miles on the Odo, I have had to replace one chrome plated nut on the grill. I forgot to tighten it. The ride is superb, and "no more tingles".

Ride Easy, Rough Rider. EZed

analyzing piston wear patterns

by Robert Taylor

MOTOR SERVICE NOVEMBER 1970

When a localized hot spot between piston and cylinder wall exceeds temperature stability of piston material, bits of metal tear away from piston skirt and scuffing occurs

Piston scuffing and scoring doesn't just happen. It's always the result of an excessive pressure and temperature concentration of two mating surfaces. Damage varies from a light scuff on the piston skirt to a heavy score and pulling away of the piston material. Correction calls for the replacement of damaged parts—plus finding and correcting all causes before the engine is reassembled.

Possible causes of scuffing and scoring include:

1 Abrasives introduced through air intake.
2 Lack of oil on cylinder walls.
3 Plugged oil pump screen.
4 Defective or worn oil pump.
5 Insufficient rod bearing clearances, reducing oil throw-off.
6 Low oil level or contaminated oil.
7 Inefficient cooling system.
8 Coolant leakage into cylinders.
9 Detonation and raised piston temperatures.
10 Lugging or overloading of engine.
11 Improper piston clearance.
12 Incorrect break-in.
13 Excessively long idling periods.
14 Piston pin fit too tight in pin bosses.
15 Pin fit too tight in rod eye.
16 Pin hole damaged by improper installation of pin.

INADEQUATE LUBRICATION

Abrasives entering the combustion chamber because of air filtration problems and lack of lubricating oil on cylinder walls are two major causes of scuffing and scoring of pistons, rings and cylinder walls. Poor maintenance usually is the reason here, so the correction is parts replacement, followed by proper maintenance practices. In addition, all sources of oil leaks should be checked and corrected.

Poor lubrication also may result from a worn oil pump or a plugged oil pump screen or oil passage.

Remember that too much lubrication (oil flow) in any part of the engine will reduce oil pressure to other parts of the engine — and the other parts will suffer. Thus a defective oil pressure relief valve (stuck open) will prevent adequate oil flow to the cylinders. Worn main bearings can reduce the amount of oil throw-off from connecting rod bearings. Likewise, insufficient rod bearing clearances will restrict throw-off.

BEWARE OF CONTAMINATED OIL

Contaminated engine oil is another prime cause of scuffing because its lubricating ability is reduced by excessive blow-by or raw fuel. A simple thing like an incorrect carburetor setting can cause serious oil dilution. And many cases of scuffing are due to flooding of the engine by overchoking or because of a faulty automatic choke.

Also consider that long periods of engine idling contribute to engine damage because the fuel may not burn completely, carbon deposits form and excess fuel washes lubricating oil from the cylinder walls. Dilution of crankcase oil by *any* means results in poor lubrication of *all* moving parts.

INADEQUATE COOLING

Poor engine cooling generally is regarded as a prime cause of scuffing. Anything in the cooling system that restricts coolant flow, or will not allow heat to be carried away fast enough, tends to promote scuffing.

Start troubleshooting by checking the cooling system for leaks. Hoses, hose connections, radiator, core hole plugs, drain cocks and cylinder head gaskets are the most frequent offenders. Internal coolant loss due to a defective head gasket may cause coolant to enter the combustion chamber and break down the lubrication film between pistons, rings and cylinder walls. Scuffing is the direct result.

Clogged radiators due to leaves, bugs and, in some cases, bug screens are frequent causes of inadequate cooling because they prevent maximum air flow.

Any deposits of dirt and lime in the engine block will restrict coolant flow and cause localized hot spots that lead to scuffing.

Other types of failures in the cooling system that can cause overheating problems include soft hoses that collapse at high speeds, defective thermostats, defective pressure caps and/or a water pump that leaks or has corroded impeller blades.

DETONATION, PREIGNITION, LUGGING

High pressure and high temperature which exist during detonation are usually so great that ordinary cooling and lubrication systems can't control them. Scuffing results. The same is true of preignition, which is why engines should not be power timed as a means of achieving more rpm or power. This is especially true on late model engines where detonation is inaudible at high speeds.

Lugging an engine stimulates detonation and is considered good cause for piston scuffing. Although car owners with automatic transmissions usually can by-pass this cause, owners who prefer "stick" transmissions should be advised to shift to a lower gear rather than lug their engines at abnormal rpm.

Lugging causes scuffing in two ways. It allows the increased fuel charge to create higher temperature and pressure in the combustion chambers, and the accompanying low engine speed prevents adequate flow of engine coolant and engine oil.

PATTERNS OF WEAR

Most scuffing and scoring of pistons is confined to one side or both sides of the piston, either on the maximum thrust face or on both maximum and minimum thrust faces.

Scuffing due to improper piston pin fit will show up in an area 45 deg. on either side of the pin hole. When temperatures change, the normal movement (or breathing) of the piston will be greatly restricted if the pin fit does not allow for this natural expansion and contraction factor.

A "hot" piston assumes a near-round shape. When it cools down, it should return to its original camshape — unless the pin has been fitted too tight. If this happens, the piston will hang up on the tight pin, and it will assume an unnatural shape. Then when the engine is started up again, the piston will scuff and score until combustion temperatures loosen the pin fit.

AVOID DRY STARTS

Finally, use caution when starting an engine after a re-ring job or an overhaul, because the engine oil has not yet reached all parts of the engine. To avoid scuffing due to this possibility, pressurize the lubrication system by means of a leak detector attached to the engine at any convenient fitting that leads to an oil gallery. O

MCC Reprint Library as of November 1969

1. "+8 Road Rest," Autocar, (Morgan issue), September 12, 1968.
2. "Morgan Mystique," Realities, November 1968.
3. "+4 Road Test," Autosport, August 8, 1958.
4. "Morgan," Car and Driver, July 1965.
5. "Morgan +4," Car and Driver, December 1967.
6. "How to Own a Morgan +4 Drophead, From Snobs Guide to Status Cars, Playboy, 1960.
7. "4/4 Road Test," Road and Track, June 1957.
8. "Morgan--Last Classic?," Road and Track, July 1960.
9. "Morgan +4 Road Test," Road and Track, September 1959.
10. "London Auto Show with Picture," Road and Track, February 1962.
11. "Morgan +4," Road and Track, February 1955.
12. All the World's Cars (1954).
13. "Morgan Three Wheeler," Road and Track, December 1965.
14. "4/4 and +4 Super Sports," Road and Track, July 1962.
15. "1939 Super Sports," Road and Track, March 1957.
16. "4/4," Sports Cars Illustrated, November 1957.
17. "4/4," Car and Driver, November 1961.
18. "A Visit to the Morgan Factory," Road and Track, March 1957.
19. "+4+," Road and Track, 1965.
20. Mid-50's and 60's Sales Brochures.
21. 1968 4/4, +8 Factory Brochures.
22. History of a Famous Car--Morgan ($1.50).
23. "The Lancia Type Independent Front Suspension," technical article, Road and Track, July 1955 (very interesting).
24. The +4 Morgan Profile No. 65 (also in Classic Cars in Profile, Vol. 3).
25. "The Malvern Flyer," Automobile Quarterly, Vol. 5, No. 2.
26. Morgan Autobook One (1967)
27. Ken Purdy, "Kings of the Road," Playboy, 1969.
28. Three and Four Wheeler Maintenance Manuals.
29. Cartoons and Pictures.

THE LAST PAGE

Credit where credit is due;

Page	5	M.J. McKusic, Wilmington, Delaware
	6	Washington Morgan Club
	7-9	Califorina Morgan Club
	15-19	Washington Morgan Club

Mics Ramblings

TRADE high acceleration 4.56 rear end from '66 4/4 for a standard 4.1 rear end.....please Peter Vickery
487-9394
749-7342

FEB. 24 th (saturday) The annual February informal gathering of Morgan type people, films, slides, girls, shop talk, and booze (b.y.o.b.)

Dave and Pauline Smith
4 Goodwood Drive
Bramalea, Ontario

Anyone having any information on any of the following are kindly requested to let Norm or Mike know and we will publize it.

Parts you need
Parts you have and want to tade away or sell
Places..... engine fixing
mechanical work
tuning
repairs
body work(yours or the cars)

The more people that know what you know the better of the rest of us will be, and owning a Morgan we need all the help we can get. This is your organization and we can only give our knowledge to everyone if its passed on to us. So please give generously of your knowledge.

Typist note: Please excuse any or all typing or spelling error as I only can use the Paand H method(peck and hunt for you non typists)

GOOOOOOOOOD MORGANEERING IN '73